Technical sheet :

MXT 1740 P



MANITOU
HANDLING YOUR WORLD

Capacities		Metric
Max. capacity	Q	4000 kg
Max. lifting height		17.40 m
Max. outreach		13.48 m
Weight and dimensions		
Overall length to carriage	l11	6.20 m
Overall width	b1	2.38 m
Overall height	h17	2.59 m
Wheelbase	y	2.90 m
Ground clearance	m4	380 mm
Overall cab width	b4	0.78 m
External turning radius (over tyres)	Wa1	4.05 m
Unladen weight (with forks)		11235 kg
Overall weight		11235 kg
Forks length / width / section	l / e / s	1200 mm x 125 mm x 50 mm
Performances		
Lifting		13.60 s
Lowering		9.40 s
Extension		25 s
Retraction		14.10 s
Crowd		4.10 s
Dump		3.20 s
Engine		
Engine brand		Perkins
Engine norm		Stage IIIA
Engine model		1104D-44T EPA
Number of cylinders / Capacity of cylinders		4 - 4.40 l
Engine power (Hp/kW)		92 Hp / 70 kW
Max. torque		392 Nm
Transmission		
Transmission type		Torque converter with manual transmission
Number of gears (forward / reverse)		4 / 4
Max. travel speed		28 km/h
Max. travel speed (may vary according to applicable regulations)		28 km/h
Parking brake		Manual
Service brake		Oil-immersed multi-discs braking on front & rear axles
Hydraulics		
Hydraulic pump type		Gear pump
Hydraulic flow / Pressure		96.70 l/min-250 bar
Tank capacities		
Hydraulic oil		125 l
Fuel tank capacity		80 l
Noise and vibration		
Noise at driving position (LpA)		92 dB
Noise to environment (LwA)		110 dB
Miscellaneous		
Steering wheels (front / rear)		2 / 2
Drive wheels (front / rear)		2 / 2
Controls		Monolever

MXT 1740 P - Dimensional drawing

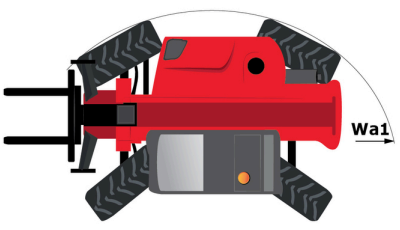

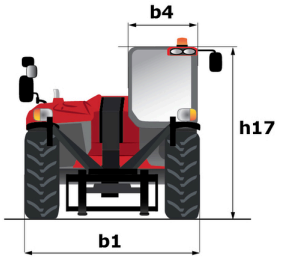

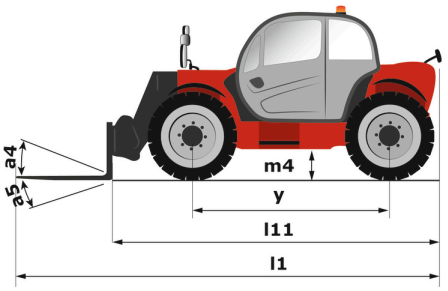

MXT 1740 P - Load chart

Machine on tires with forks Metric

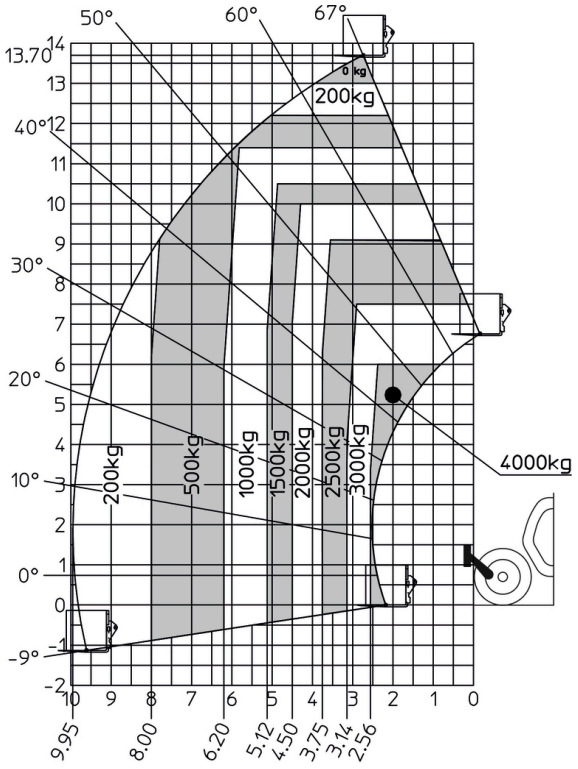

Machine on lowered stabilisers with forks Metric

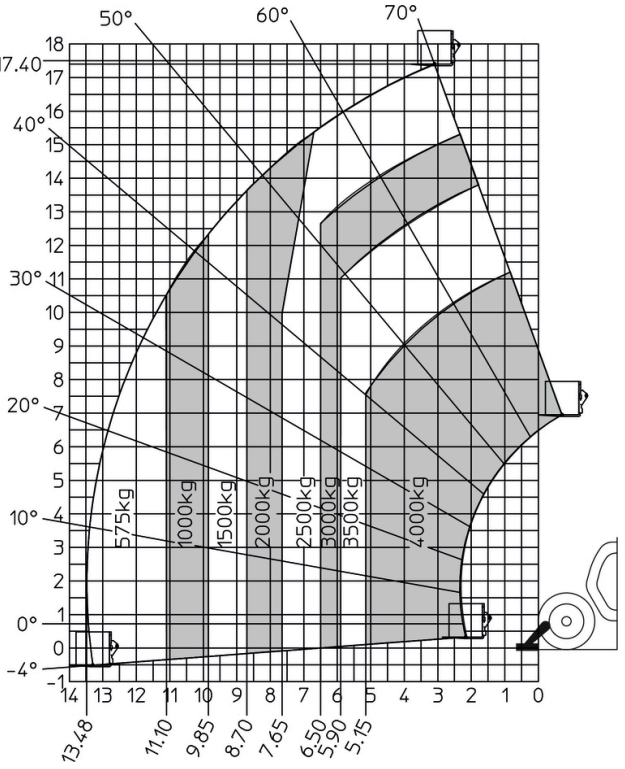

Head Office
B.P. 249 - 430 rue de l'Aubinière
44150 Ancenis Cedex - France
Tel: +33 (0)2 40 09 10 11 - Fax: +33 (0)2 40 09 10 97
www.manitou.com



This publication provides a description of the configuration versions and options for Manitou products, which may differ for equipment. The equipment presented in this brochure may be part of a series, as an option, or it may not be available, depending on the versions. Manitou reserves the right, at any time and without notice, to amend the specifications described and represented. The specifications provided do not bind the manufacturer. For more details, please contact your Manitou agent. This is not a contractually binding document. The presentation of the products is not contractually binding. List of specifications non-exhaustive. The logos as well as the visual identity of the company are owned by Manitou and cannot be used without authorisation. All rights reserved. The photos and diagrams contained in this brochure are only provided for consultation and information purposes.
MANITOU BF SA - Limited company with board of directors - Share capital: 39,668,399 euros - 857 802 508 RCS Nantes